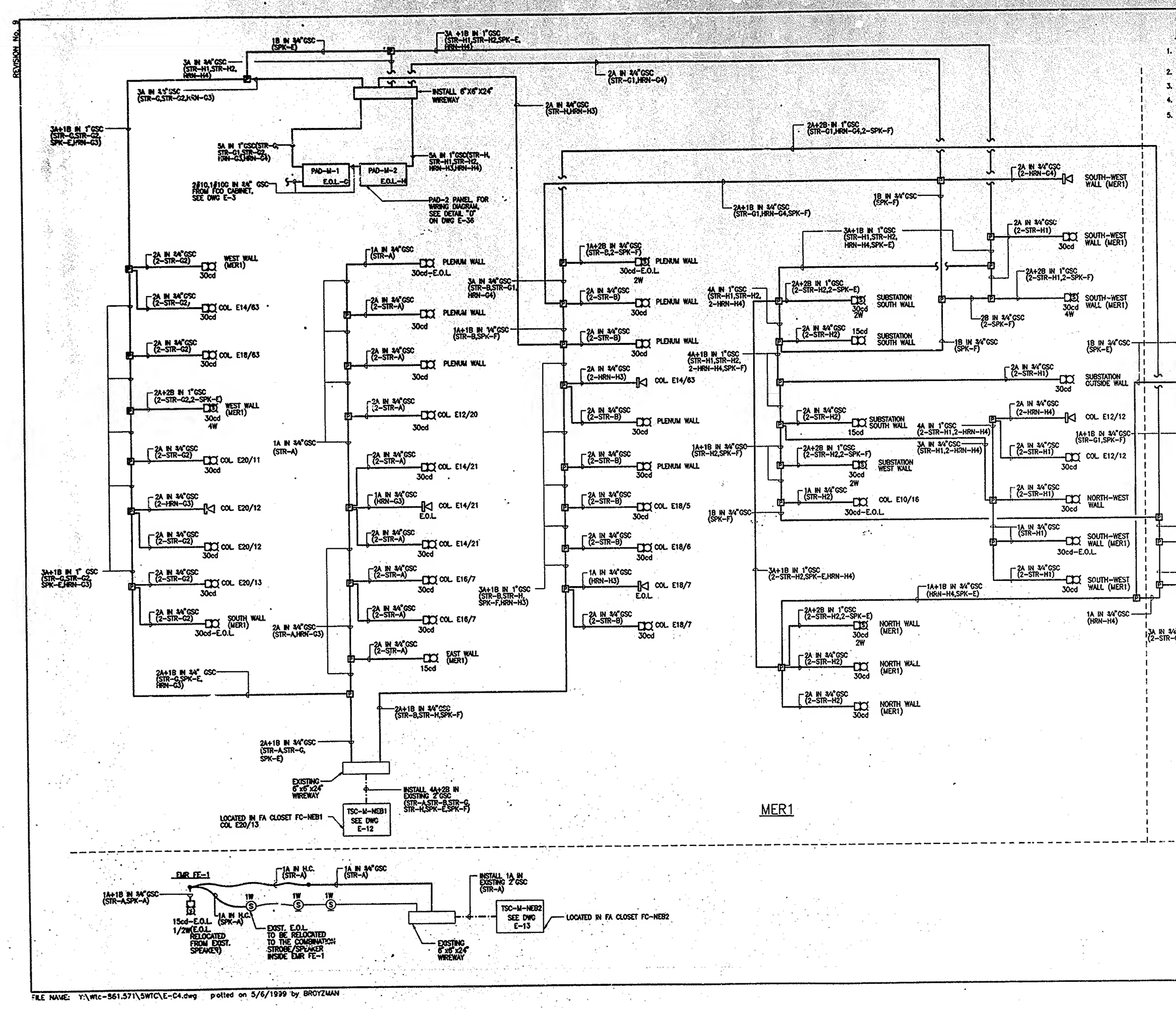

FILE NAME: Y:\wtc-961.571\5WTC\E-C4.dwg plotted on 5/6/1999 by BROYZMAN